Metric Light 24° Thread Information

Male

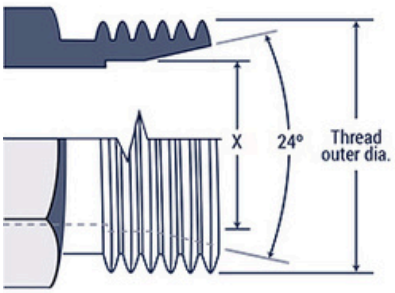

STEP 1: Compare your fitting Sealing Shape with the above provided SHAPE

STEP 2: Measure Outside Diameter

STEP 3: Identify Thread Size against fitting Outside Diameter BELOW

Thread Size	Outside ∅
M12 x 1.5	12 mm
M14 x 1.5	14 mm
M16 x 1.5	16 mm
M18 x 1.5	18 mm
M22 x 1.5	22 mm
M26 x 1.5	26 mm

Female

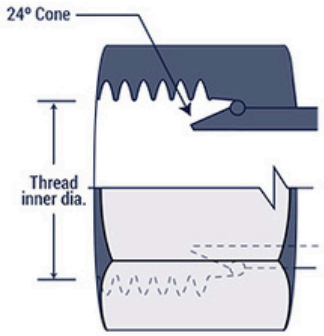

STEP 1: Compare your fitting Sealing Shape with the above provided SHAPE

STEP 2: Measure Inside Diameter

STEP 3: Identify Thread Size against fitting Inside Diameter BELOW

Thread Size	Inside ∅
M12 x 1.5	10.50 mm
M14 x 1.5	12.50 mm
M16 x 1.5	14.50 mm
M18 x 1.5	16.50 mm
M22 x 1.5	20.50 mm
M26 x 1.5	24.50 mm